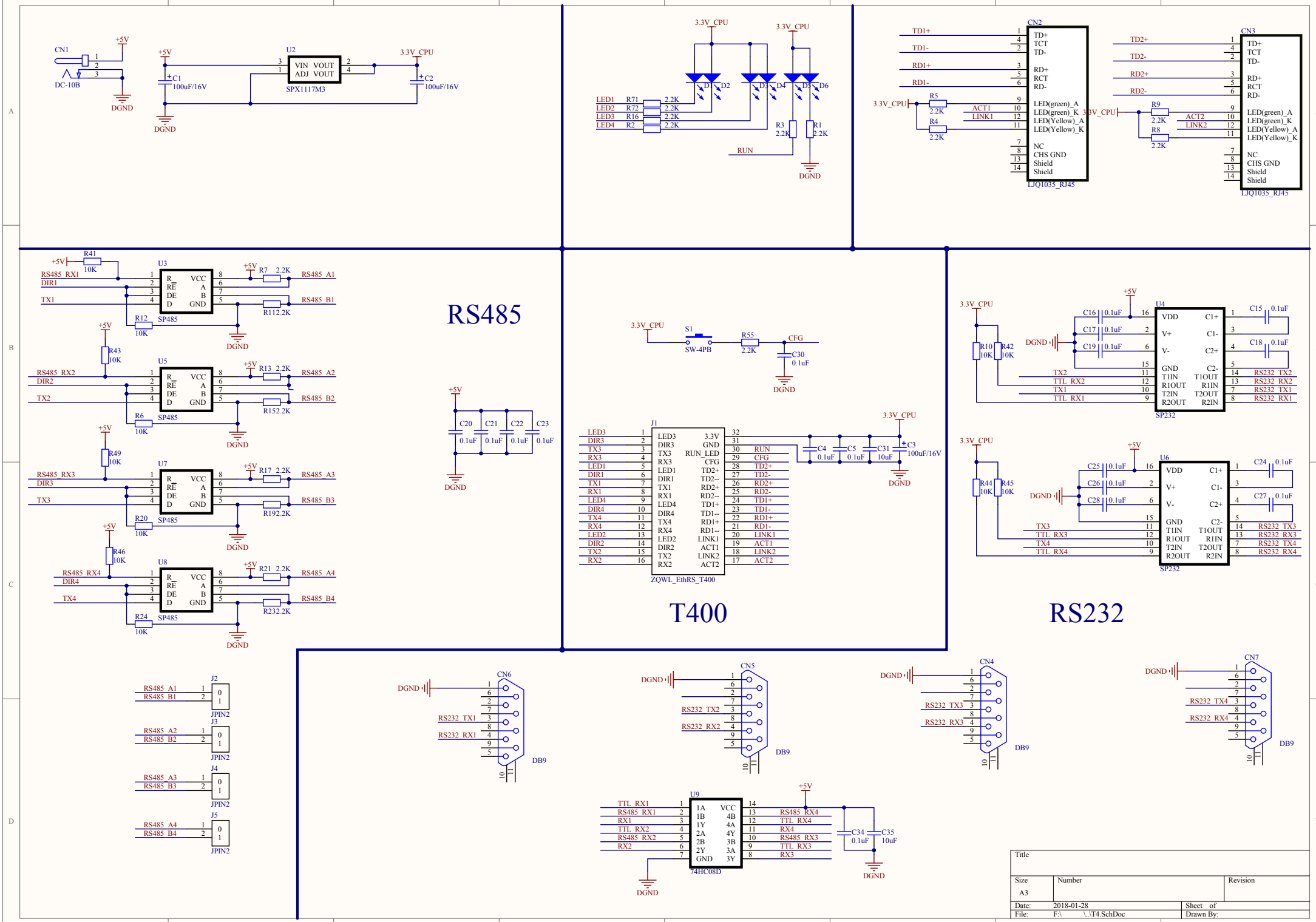
CN1
DC-10B
DGND
+5V
C1
100uF/16V
U2
VIN VOUT
ADJ VOUT
SPX1117M3
3.3V_CPU
C2
100uF/16V
LED1 R71 2.2K
LED2 R72 2.2K
LED3 R16 2.2K
LED4 R2 2.2K
D1 D2 D3 D4 D5 D6
R3 2.2K
R1 2.2K
RUN
CN2
TD+ TCT TD-
RD+ RCT RD-
LED(green)_A
LED(green)_K
LED(Yellow)_A
LED(Yellow)_K
NC
CHS GND
Shield
LJQ1035_RJ45
TD1+ TD1- RD1+ RD1-
R5 2.2K
R4 2.2K
ACT1 LINK1
CN3
TD2+ TD2- RD2+ RD2-
R9 2.2K
R8 2.2K
ACT2 LINK2
RS485
U3 U5 U7 U8
SP485
R_ RE DE D VCC A B GND
RS485_RX1 DIR1 TX1
RS485_RX2 DIR2 TX2
RS485_RX3 DIR3 TX3
RS485_RX4 DIR4 TX4
R41 10K
R12 10K
R43 10K
R6 10K
R49 10K
R20 10K
R46 10K
R24 10K
R7 2.2K
R13 2.2K
R17 2.2K
R21 2.2K
RS485_A1 RS485_B1
RS485_A2 RS485_B2
RS485_A3 RS485_B3
RS485_A4 RS485_B4
R112.2K
R152.2K
R192.2K
R232.2K
C20 C21 C22 C23
0.1uF
S1
SW-4PB
R55 2.2K
CFG
C30 0.1uF
J1
ZQWL_EthRS_T400
LED3 DIR3 TX3 RX3 LED1 DIR1 TX1 RX1 LED4 DIR4 TX4 RX4 LED2 DIR2 TX2 RX2
3.3V LED3 GND RUN_LED CFG TD2+ TD2-- RD2+ RD2-- TD1+ TD1-- RD1+ RD1-- LINK1 ACT1 LINK2 ACT2
RUN CFG TD2+ TD2- RD2+ RD2- TD1+ TD1- RD1+ RD1- LINK1 ACT1 LINK2 ACT2
C4 0.1uF
C5 0.1uF
C31 10uF
C3 100uF/16V
T400
U4 U6
SP232
VDD V+ V- GND T1IN R1OUT T2IN R2OUT
C1+ C1- C2+ C2- T1OUT R1IN T2OUT R2IN
C16 C17 C19 0.1uF
C15 C18 0.1uF
C25 C26 C28 0.1uF
C24 C27 0.1uF
R10 10K
R42 10K
R44 10K
R45 10K
TX2 TTL_RX2 TX1 TTL_RX1
RS232_TX2 RS232_RX2 RS232_TX1 RS232_RX1
TX3 TTL_RX3 TX4 TTL_RX4
RS232_TX3 RS232_RX3 RS232_TX4 RS232_RX4
RS232
J2 J3 J4 J5
JPIN2
CN6 CN5 CN4 CN7
DB9
U9
74HC08D
1A 1B 1Y 2A 2B 2Y GND
VCC 4B 4A 4Y 3B 3A 3Y
TTL_RX1 RS485_RX1 RX1 TTL_RX2 RS485_RX2 RX2
RS485_RX4 TTL_RX4 RX4 RS485_RX3 TTL_RX3 RX3
C34 0.1uF
C35 10uF
Title
Size A3
Number
Revision
Date: 2018-01-28
File: F:\ \..\T4.SchDoc
Sheet of
Drawn By: